modular

Client _____ Quantity _____

Project _____ Position _____

ROC 700

Model: R70/40GRLI/T **Cod:** MP01454113011

Technical data

Modularity:	Top
Dimension (mm):	400x730x280
Packing dimensions (mm):	480x856x475
Gross weight (kg):	52,4
Gross volume (m3):	0,195

Features

Grill:	In stainless steel
Working top:	Made of AISI 304 stainless steel with a thickness of 20/10 mm
Knobs:	Made of aluminum with IPX5 water protection
Liquid collection container:	Removable and dishwasher safe
Upright Splash guard:	On three sides
Kit Gas:	Natural gas conversion kit 30/50 m/bar (tested with natural gas G20)

In order to constantly offer the best possible products we reserve the right to make changes on technical specifications without incurring any obligation for equipment previosly or subsequently sold.

Lava-stone grill, 1 cooking zone in stainless steel, top

Gas lava stone grill,, counter top model. Side panels, bottom and back made in stainless steel. Top made in AISI 304 thickness 20/10. designed for flush alignment. Lava stone support made in Cast Iron. V shaped hob grill made in stainless steel. Lever-controlled grill raising mechanism to control distance of grill from brazier with one hand. Grease collection by an upper front extractable tray and by an extractable drawer located under the heating zone. Heating by means of steel burner with stabilized flame complete with pilot flame and safety thermocouple. Cooking temperature manually controlled by gas supply safety tap. Automatic ignition by means of piezoelectric device with waterproof cap. Special design knobs to avoid water penetration in the control panel. Adjustable feet. IPX5 protection rating. Gas total power 7.5 kW.

Technical draw

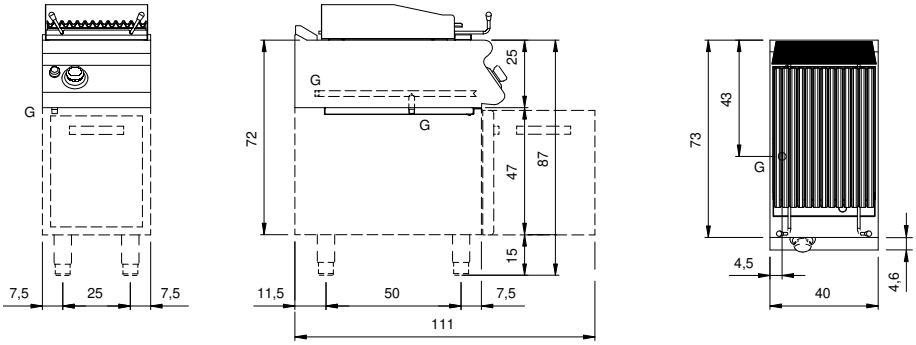

G: Gas connection 1/2"

In order to constantly offer the best possible products we reserve the right to make changes on technical specifications without incurring any obligation for equipment previosly or subsequently sold.