modular

Kunde

Menge

Projekt

Lage

ROC 1100

Modell: R110/100FTG/LR/P

Cod: MP01375115006

Market: Extra UE

In order to constantly offer the best possible products we reserve the right to make changes on technical specifications without incurring any obligation for equipment previosly or subsequently sold.

Elektro-Griddle-Platte, platte 2/3 glatt 1/3 gerillt, aus Weicheisenstahl, auf Schrank mit Tür

Technische Zeichnung

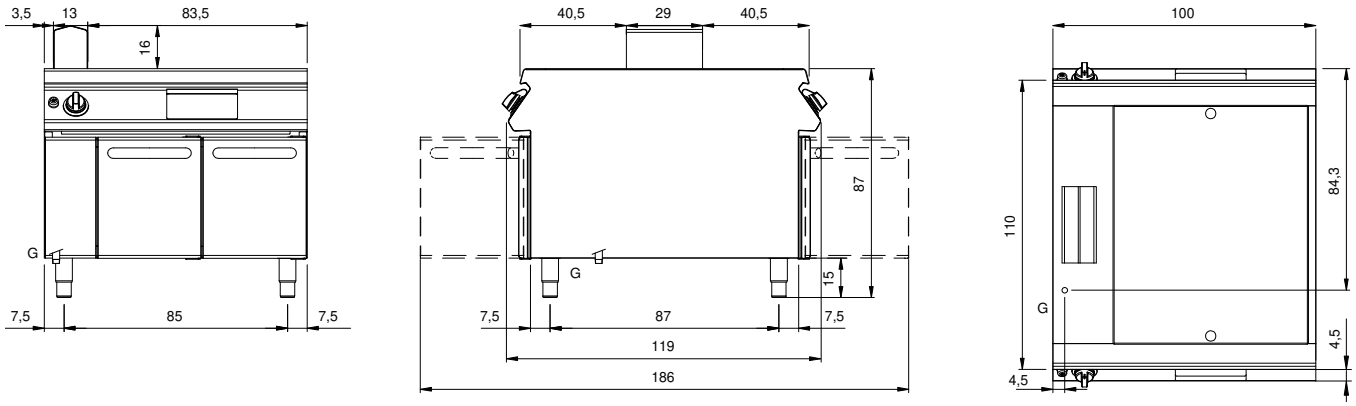

G: Conexión de gas de 1/2 "

In order to constantly offer the best possible products we reserve the right to make changes on technical specifications without incurring any obligation for equipment previosly or subsequently sold.