modular

Client _____ Quantity _____

Project _____ Position _____

ROC 700

Model: R70/40SPE/P **Cod:** MP01334123003

Technical data

Modularity:	On cabinet with door
Dimension (mm):	400x730x870
Total eletric power (kW):	1
Nr. Wells:	1
Well litres 1:	25,5
Well dimensions 1 (mm):	530x325x150
Electric power (V):	220-240
Ampere (A):	5
Phases:	1
Cable section (mmq):	3G1
Frequency (Hz):	50-60
Net volume (m3):	0,254
Packing dimensions (mm):	480x856x1075
Gross weight (kg):	43,1
Gross volume (m3):	0,442

Features

Working top:	Made of AISI 304 stainless steel with a thickness of 20/10 mm
Knobs:	Made of aluminum with IPX5 water protection
Handles:	The brushed aluminum handles allow for a secure and sturdy grip with a ergonomic lines
Heating:	Infrared ceramic heating elements

In order to constantly offer the best possible products we reserve the right to make changes on technical specifications without incurring any obligation for equipment previosly or subsequently sold.

Heated chip dump, on cabinet with door

Heated chip dump, model on counter with door. Side panels, bottom and back made in stainless steel. Top made in AISI 304 thickness 20/10. designed for flush alignment. Louvered double bottom ot permit the drip of excess oil. Well suitable for GN 1/1 containers with 150 mm max. height. Infreared lamp located on the upper part for food heating. ON/OFF switch located on the board panel. Special design knobs to avoid water penetration in the control panel. Base completely made in stainless steel. Pressed hinged door. Ergonomic handle. Adjustable feet made in stainless steel. IPX5 protection rating. Electric power supply VAC 230 1N 50÷60 Hz - 1 kW.

Technical draw

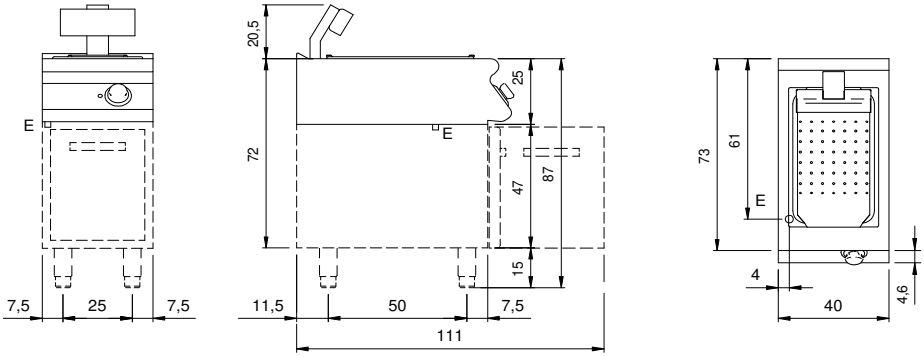

E: Electric power

In order to constantly offer the best possible products we reserve the right to make changes on technical specifications without incurring any obligation for equipment previosly or subsequently sold.