modular

Client _____ Quantity _____

Project _____ Position _____

ROC 1100

Model: R110/60IND/A **Cod:** MP01135125001

Technical data

Modularity:	On open cabinet
Dimension (mm):	600x1100x870
Total eletric power (kW):	10
Electric power (V):	380-415
Ampere (A):	15,5
Phases:	3N
Cable section (mmq):	5G2,5
Frequency (Hz):	50-60
Net volume (m3):	0,574
Packing dimensions (mm):	880x1272x1274
Gross weight (kg):	86
Gross volume (m3):	1,426

Features

Working top:	Made of AISI 304 stainless steel with a thickness of 2 mm
Knobs:	Made of aluminum with IPX5 water protection
Flue:	Made of AISI 304 stainless steel

In order to constantly offer the best possible products we reserve the right to make changes on technical specifications without incurring any obligation for equipment previosly or subsequently sold.

modular

Induction plate, 2 cooking zones,
on open cabinet

Induction hob with 2 cooking zones, model on open cabinet. Side panels, bottom and back made of stainless steel. Glass ceramic hob sealed to the top. Lateral flue made of stainless steel. Top designed for flush alignment. Heating is activated by the pots detection system when they are in contact with the plate equipped with 2 indipendent cooking zones each with 5 kW. Cooking zone marked with a screen printed outline on the glass. Lamps on control panel to indicate heating activation and the proper equipment operation designed for flush alignment. Special design knobs to avoid water penetration in the control panel on both sides. Base completely made of stainless steel. Adjustable feet made of stainless steel. IPX5 protection rating. Electric power supply VAC 400 3N 50÷60 Hz - 10 kW.

Technical draw

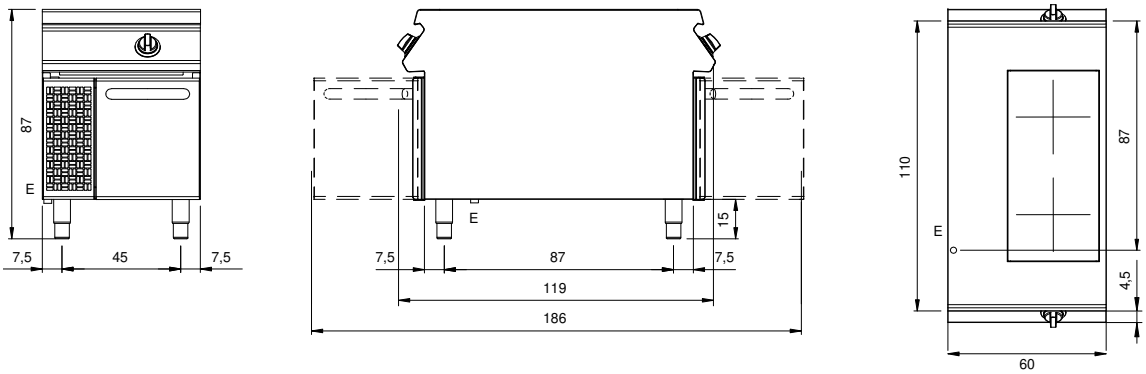

E: Electric power

In order to constantly offer the best possible products we reserve the right to make changes on technical specifications without incurring any obligation for equipment previosly or subsequently sold.