modular

Client	Quantity
Project	Position

ROC 900

Model: R90/80TPG/T **Cod:** MP01054114001

Technical data

Modularity:	Top
Dimension (mm):	800x900x280
Total gas power (Kcal/h):	10319
Total gas power (kW):	12
Whole-plate power gas (kW):	12
Gas connection:	1/2"
Net volume (m3):	0,202
Packing dimensions (mm):	880x1026x509
Gross weight (kg):	105
Gross volume (m3):	0,460

Features

Working top:	Made of AISI 304 stainless steel with a thickness of 20/10 mm
Knobs:	Made of aluminum with IPX5 water protection
Flue:	Removable made of cast iron
Kit Gas:	Natural gas conversion kit 30/50 m/bar (tested with natural gas G20)

In order to constantly offer the best possible products we reserve the right to make changes on technical specifications without incurring any obligation for equipment previosly or subsequently sold.

Gas solid top range, model top. Side panels, bottom and back made in stainless steel. Top made in AISI 304 thickness 20/10 designed for flush alignment. Rear flue made in enamelled cast-iron. Cooking plate made in extra-thick cast iron with extractable central plate. The central zone can reach 500°c while decreasing awards (to 300 °C). Heating by cast iron burner with 12 kW power. Gas supply by means of safety tap with pilot flame and safety thermocouple. Iignition by means of piezoelectric device with waterproof cap. Plate dimensions 760x710. Special design knobs to avoid water penetration in the control panel. Adjustable feet. IPX5 protection rating. Gas total power 12 kW.

Technical draw

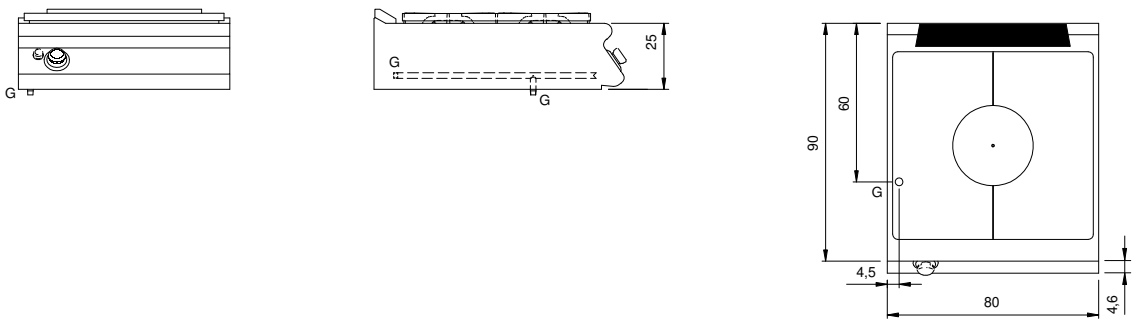

G: Gas connection 1/2"

In order to constantly offer the best possible products we reserve the right to make changes on technical specifications without incurring any obligation for equipment previosly or subsequently sold.