modular

Client _____ Quantity _____

Project _____ Position _____

FUN 700

Model: F70/70CFE **Cod:** MP01032123000

Technical data

Modularity:	Electric oven
Dimension (mm):	700x700x850
Oven dimension (mm):	565x330x325
Total eletric power (kW):	14,36
Oven type:	Electric convection oven
Oven power (kW):	3,96
Oven temperature range (°C):	50-300
Electric power (V):	380-415
Ampere (A):	29,5
Phases:	3N
Cable section (mmq):	5G6
Frequency (Hz):	50
Net volume (m3):	0,417
Packing dimensions (mm):	776x776x1180
Gross weight (kg):	87
Gross volume (m3):	0,711

Features

Working top:	Made of AISI 304 stainless steel with a thickness of 10/10 mm
Knobs:	Knobs are made from a sturdy heat-resistant polymer blend and are equipped with liquid anti-leakage washer

In order to constantly offer the best possible products we reserve the right to make changes on technical specifications without incurring any obligation for equipment previosly or subsequently sold.

modular

Electric range, 4 round plates,
electric convection oven

Electric range with 4 electric plates with electric convection oven. Top made of AISI 304 stainless steel thickness 8/10; covering in AISI 304 stainless steel thickness 8/10; bottoms and internal parts in AISI 430 steel; internal reinforcements made of anti-corrosion material (aluminised sheet metal). Hob equipped with cast iron electric plates with stainless steel edge sealed to top. Each plate is controlled by a switch with 6 possible temperature adjustments and is equipped with indicator lights to show correct operation. Model with round plates Ø 220 mm. - 4 plates x 2.6 kW. Electric convection oven Made of enamelled steel with double wall isolated door on hinges with balancing springs. The chamber is thermally insulated and equipped with side rack supports with the possibility to insert 3 pans GN 1/1 h. 65 mm. Forced convection operation by means of stainless steel fan rotor. Heating takes place by means of 3 thermostat controlled heating elements with a range of adjustment from 100° to 300° C. Equipped with thermostat controlled main switch and indicator light to show proper operation. Internal dimensions 530x340x325h. mm. Equipped with 1 rack GN 1/1. 4 plates 4x2.6 kW. Oven power 3.96 kW. Total power 14.36 kW Electrical power supply VAC 400 + 3N 50 Hz.

Technical draw

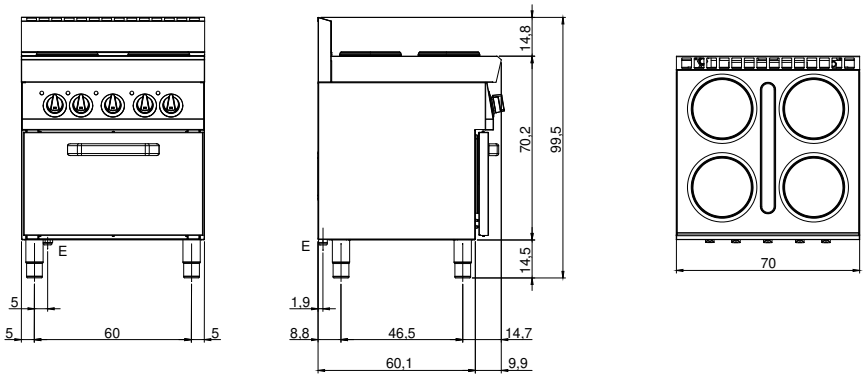

E: Electric power

In order to constantly offer the best possible products we reserve the right to make changes on technical specifications without incurring any obligation for equipment previosly or subsequently sold.